BORDOLESE Elite



KMC GLASS

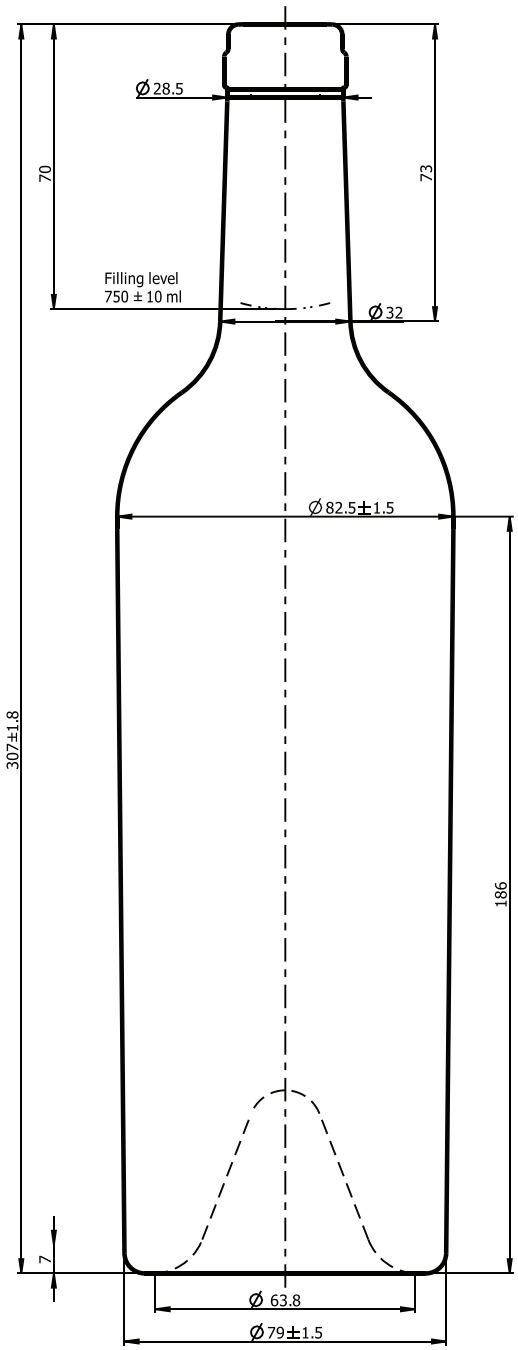

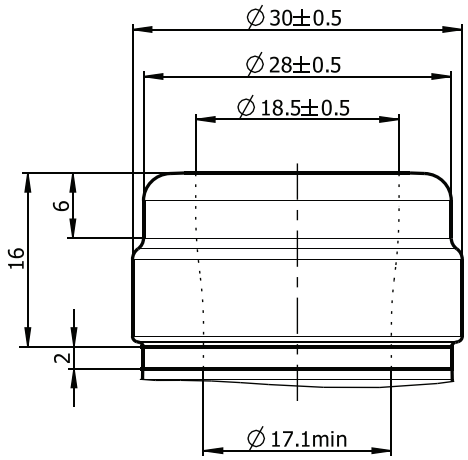

- Bordolese Elite
- Weight - 825 g
- Filling CAP - 750 ml
- Color - Olive Green
- Diameter - 82.5 ± 1.5
- Entrance bore diameter - 18.5

www.kmc.glass
sales@kmc.glass

KMC GLASS